MAHINDRA

ROXOR

OFFROAD

ROXOR ACCESSORIES CURRENT AND FUTURE

MISSION:READY // MARCH 2018

Mahindra

R. FEHAN March 18,2018

ROXOR Accessories and Special Editions Both Current and Future

R. FEHAN March 18,2018

ROXOR Key Upcoming Accessories

Flat tow capability	Not Available
ROXOR Armor Front Bumper w/ Tow Hooks	Q2 2018 end of second quarter
ROXOR Armor Rear Bumper w/ Tow Hooks	Q2 2018 end of second quarter
ROXOR Graphics Packages	Q2 2018
Locking Rear Differential	"Q3 2018 - for dealer installed Q4 India supplied axel
Side step bars	Q3 2018
SOFT Cab Enclosure	Q3 2018
Full Size Spare Kit	Q3 2018 (assumes testing successful)
Rear Storage / Cargo Box	Q3 2018
Branded Front and Rear Cargo Matts	Q3 2018 Weather Tech
Branded Cargo Bags	Q3 2018 Milton
Hard half doors Composite	Q3 2018
Hard half doors tube type	Q3 2018 Milton
ROPs covers with built in Grab Handles	Q3 2018 Milton
Rear Storage Cargo Nets	Q3 2018

MISSION:READY // MARCH 2018

ROXOR Key Upcoming Accessories

Forward Facing Rear Seats	Concurrent with Gas Auto Launch(Gas Auto will allow increased vehicle loading)
Upgraded (Branded) Shocks	Q4 2018
HVAC - air & heat	Heat = Q3 2018 AC = Concurrent with Gas Auto
Axle Ratio 5.38	Q3 2018 - for dealer installed Q4 2018 - for India supplied w/axle
Freeze Plug Heater	Q3 2018
Uplevel bolstered seats w/ opt color accents	Q3 2018
Skid Plates	Q3 2018
Snow Plow Package	Q4 2018
ROXOR Tilt Dump Box	Q4 2018 Concurrent with Gas Auto

MISSION:READY // MARCH 2018

R. FEHAN March 18,2018

ROXOR Accessories, 8000 lb. WARN Winch

ROXOR Accessories, Up Level Tough Bumper

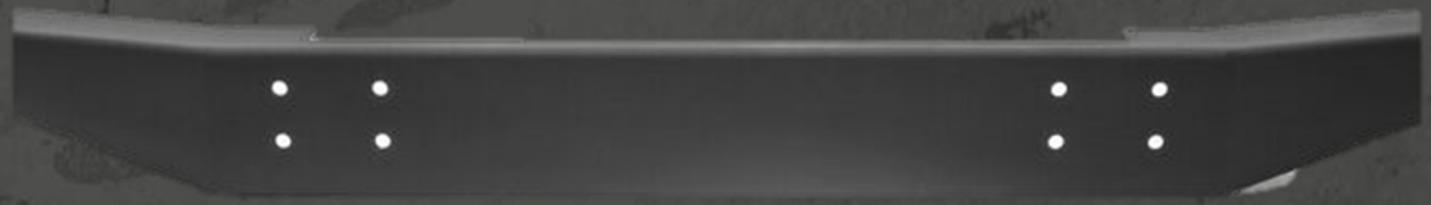

MISSION:READY // MARCH 2018

R. FEHAN March 18,2018

ROXOR Accessories, Soft Bikini Top

MISSION:READY // MARCH 2018

R. FEHAN March 18,2018

ROXOR Accessories, MTX Sound Bar

ROXOR Accessories, KC 40” Light Bar

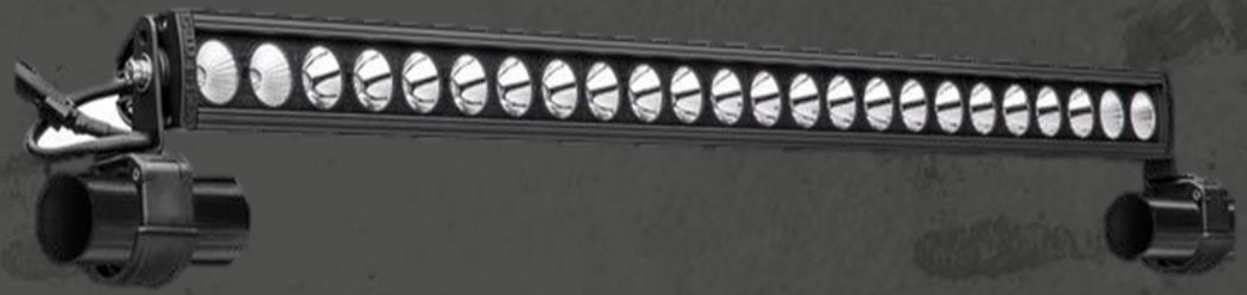

MISSION:READY // MARCH 2018

R. FEHAN March 18,2018

ROXOR Accessories, Easy Install Grab Handles

MISSION:READY // MARCH 2018

R. FEHAN March 18,2018

ROXOR Accessories, Hard Coated Windshield with Aluminum Frame with Easy Install Clamps

MISSION:READY // MARCH 2018

R. FEHAN March 18,2018

ROXOR Accessories, 3 Piece Mirror Kit

MISSION:READY // MARCH 2018

ROXOR Accessories, BFG All-Terrain T/A KO-2 with Spare Tire Kit with Jack Q2 2018

MISSION:READY // MARCH 2018

R. FEHAN March 18,2018

ROXOR Realtree Graphic Package

MISSION:READY // MARCH 2018

R. FEHAN March 18,2018

ROXOR Accessories, Matte Black Hood Graphic Kit

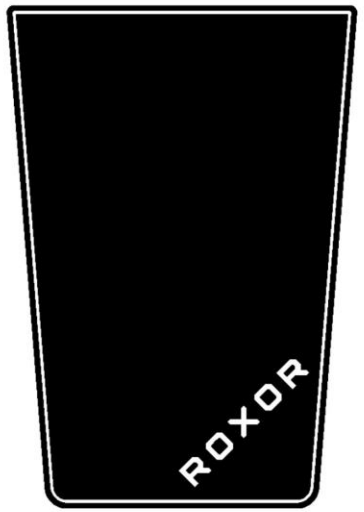

2302GUA00101N
ROXOR-MATTE
BLACK-HOOD-KIT

MISSION:READY // MARCH 2018

R. FEHAN March 18,2018

ROXOR Camo 2, Available as a Factory Installed Option or ROXOR Accessory Graphic Kit

MISSION:READY // MARCH 2018

R. FEHAN March 18,2018

ROXOR Accessories, Matte Black Hood and Cowl Graphic Kit

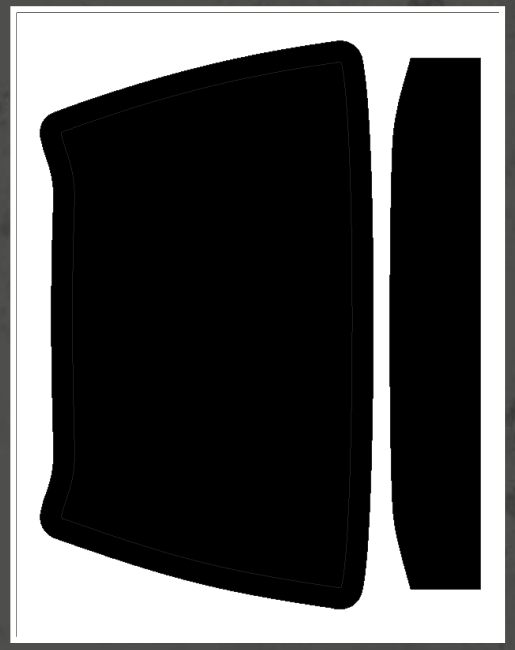

MISSION:READY // MARCH 2018

R. FEHAN March 18,2018

ROXOR Camo 1 , Available as a Factory Installed Option

MISSION:READY // MARCH 2018

ROXOR *CommandoR* WWII Edition,
Factory Installed Option

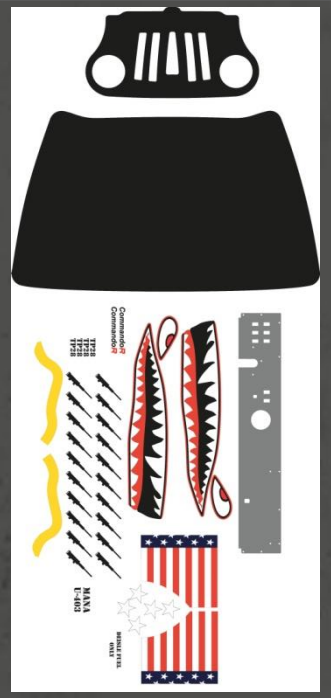

MISSION:READY // MARCH 2018

R. FEHAN March 18,2018

ROXOR *CommandoR* WWII Accessory Graphic Kit

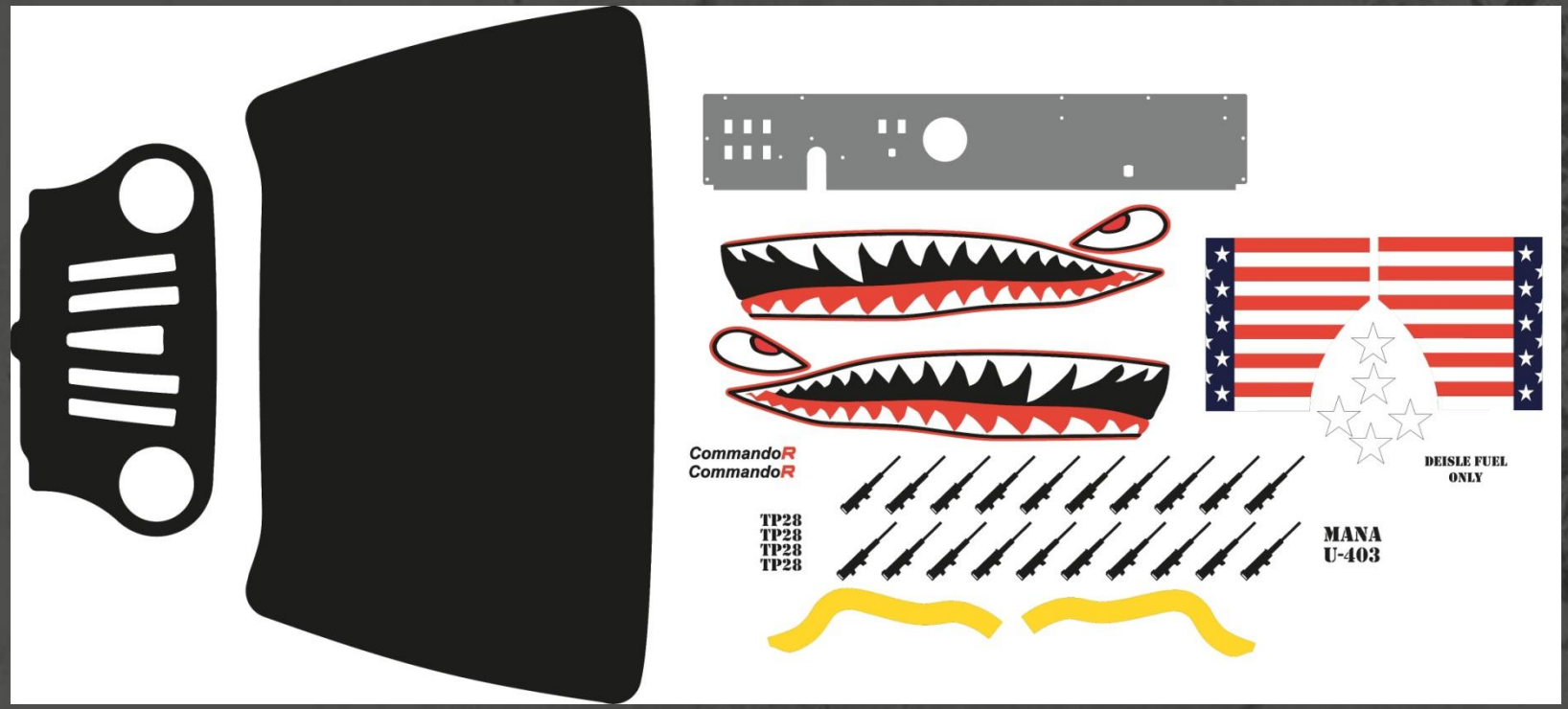

MISSION:READY // MARCH 2018

R. FEHAN March 18,2018

ROXOR Accessories, Modular Soft Cabin Enclosure Q3 2018

MISSION:READY // MARCH 2018

R. FEHAN March 18,2018

ROXOR Accessories, Two Tone Seat Options Q3 2018

ROXOR *CommandoR* Green / Black

ROXOR Heated and Cooled Seats

ROXOR Camo Seats

R. FEHAN March 18,2018

ROXOR Accessories, None Slip Bolstered Seat Option Q3 2018

MISSION:READY // MARCH 2018

R. FEHAN March 18,2018

ROXOR Key Upcoming Accessories

ROXER ROPs Padded Covers with Grab Handles Q3 2018

MISSION:READY // MARCH 2018

R. FEHAN March 18,2018

ROXOR Key Upcoming Accessories

ROXOR Off Road Seats, Belts and Tube Doors Q4 2018

MISSION:READY // MARCH 2018

R. FEHAN March 18,2018

ROXOR Customization, Colors and More

MISSION:READY // MARCH 2018

ROXOR Key Upcoming Accessories

ROXOR Lifestyle Organizer, Drop in with Dividers Q3 2018

- *Engineered to reduce cargo shifting with premium smooth skid resistance durable UV protected material*
- *Resists gasoline, oils and most chemicals*
- *Lifestyle features like molded-in dividers to manage all your cargo needs*
- *Utilizing our Vac–Forming process will allow us to accommodate all our customer Lifestyles, Hunt, Ranch, Farm, Sport, Municipality, and Government*

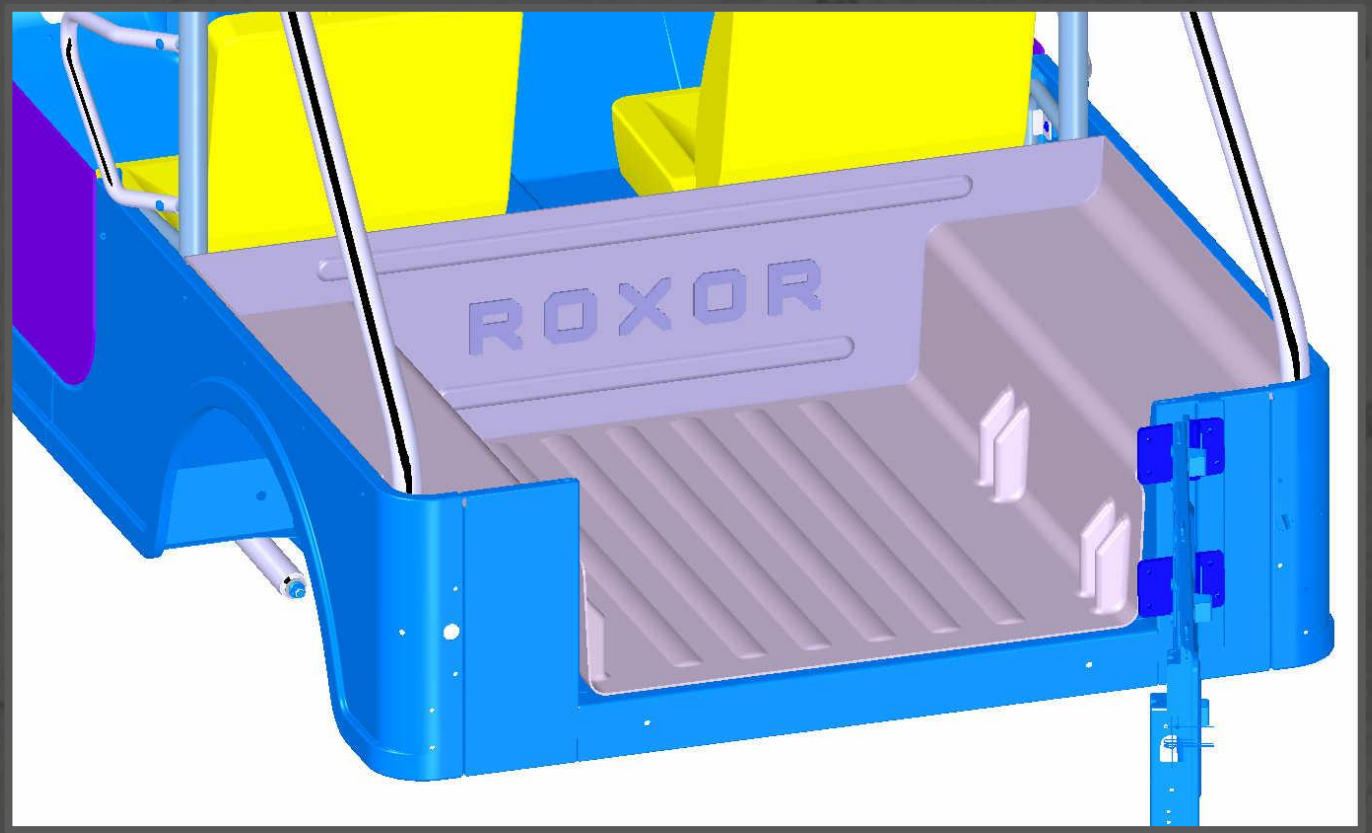

MISSION:READY // MARCH 2018

R. FEHAN March 18,2018

ROXOR Key Upcoming Accessories

ROXOR Drop in Cargo Mat Q3 2018

ROXOR Cargo Liners are custom cargo box mats are designed to keep spills, dirt and grease away from your vehicle's interior and feature a raised lip that keeps spills contained in the liner.

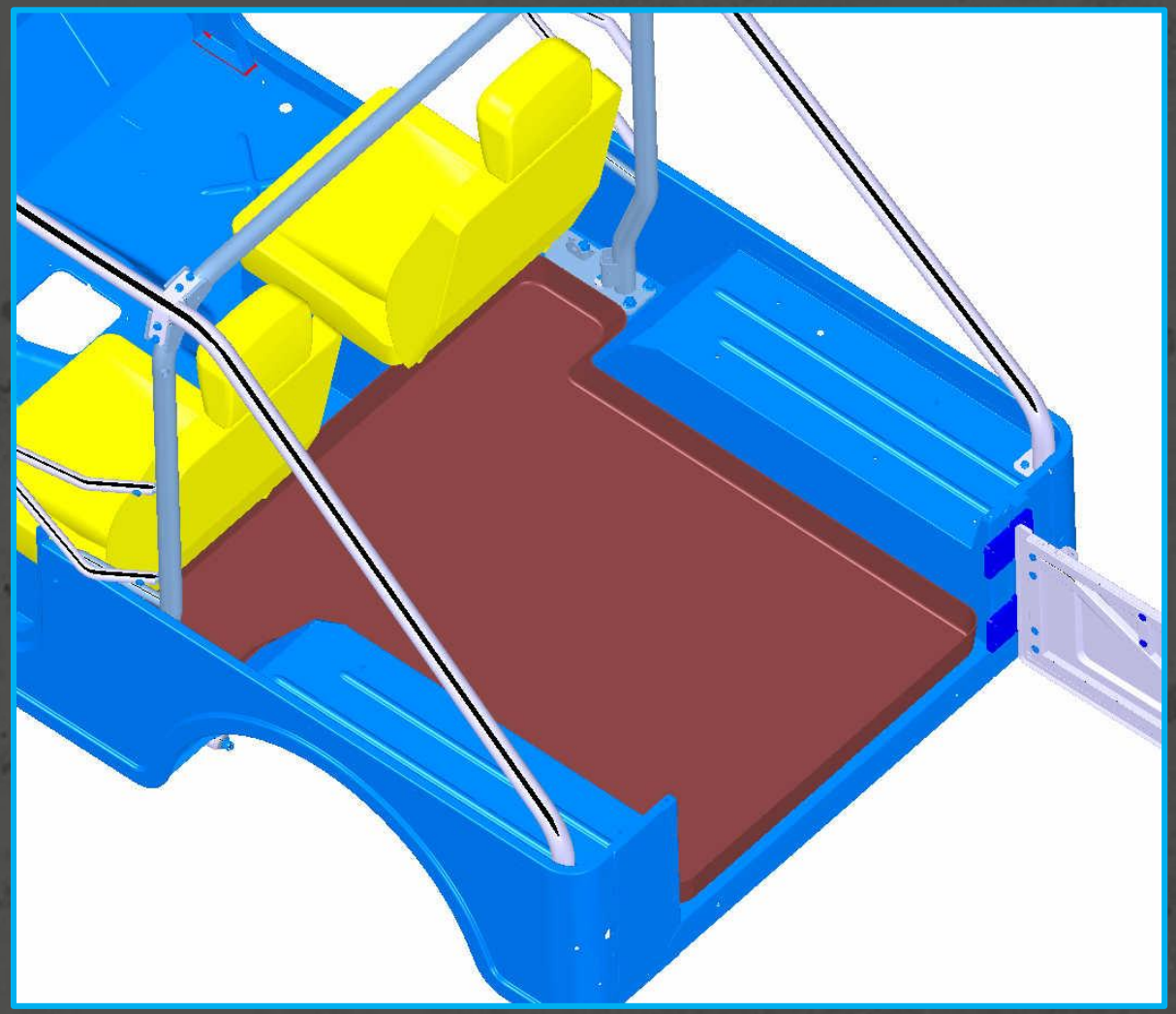

MISSION:READY // MARCH 2018

R. FEHAN March 18,2018

ROXOR Key Upcoming Accessories

ROXOR BedSlide Available with several Options Q4 2018

ROXOR / BEDSLIDE: is simply a better way to access your cargo box by turning it into an easy-access drawer. No more crawling around to get to your tools, gear or supplies. Simply grab the handle and pull, and the **ROXOR /BEDSLIDE** rolls all of your cargo out to you saving time, effort and back pain.

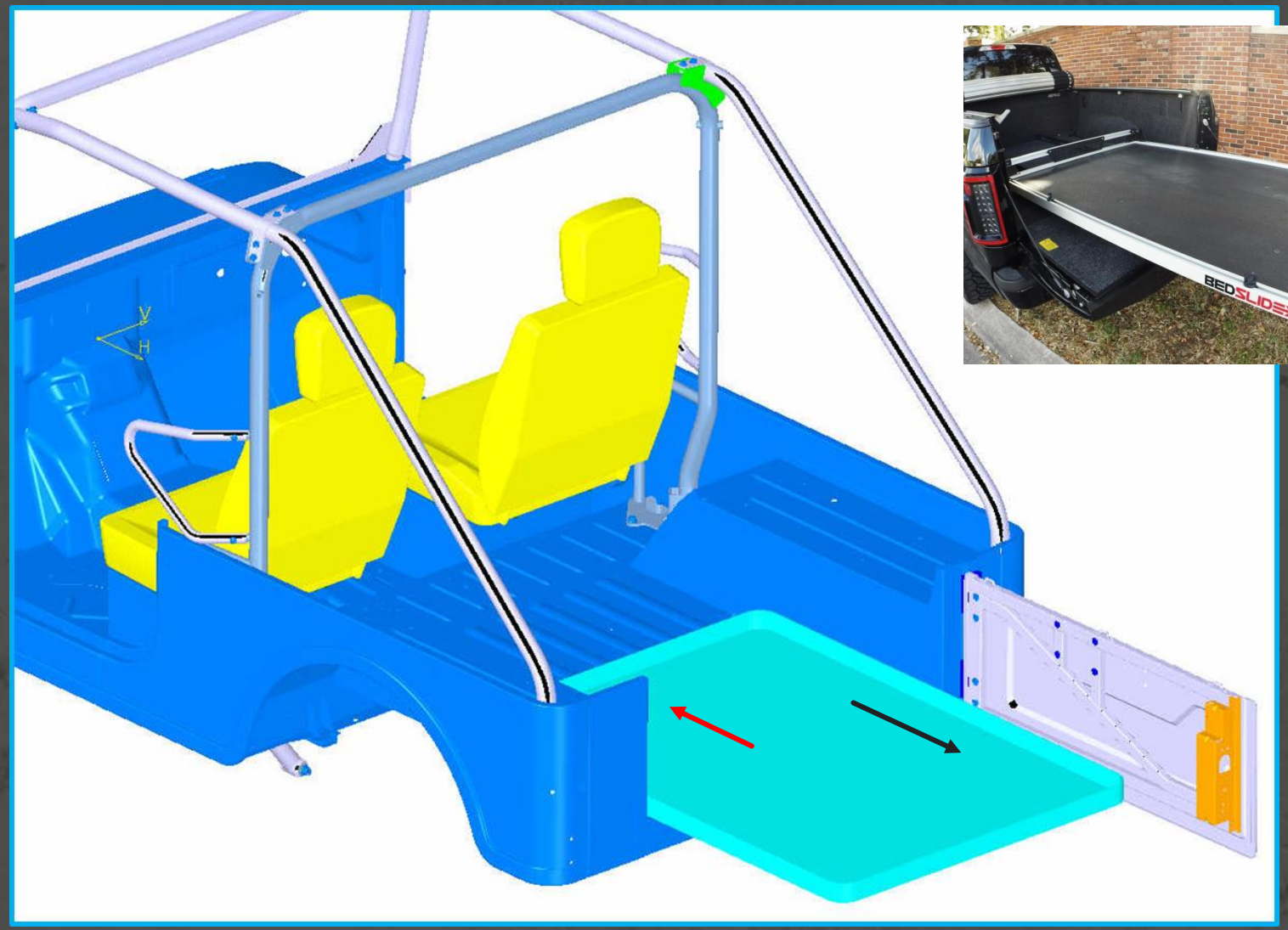

MISSION:READY // MARCH 2018

R. FEHAN March 18,2018

ROXOR Key Upcoming Accessories

ROXOR Cargo Saddle Bags Q3 2018

MISSION:READY // MARCH 2018

R. FEHAN March 18,2018

ROXOR Key Upcoming Accessories

ROXOR Under Seat Water Proof Cargo Bags Q3 2018

R. FEHAN March 18,2018

ROXOR Key Upcoming Accessories

ROXOR Rear Box Cargo Net Q3 2018

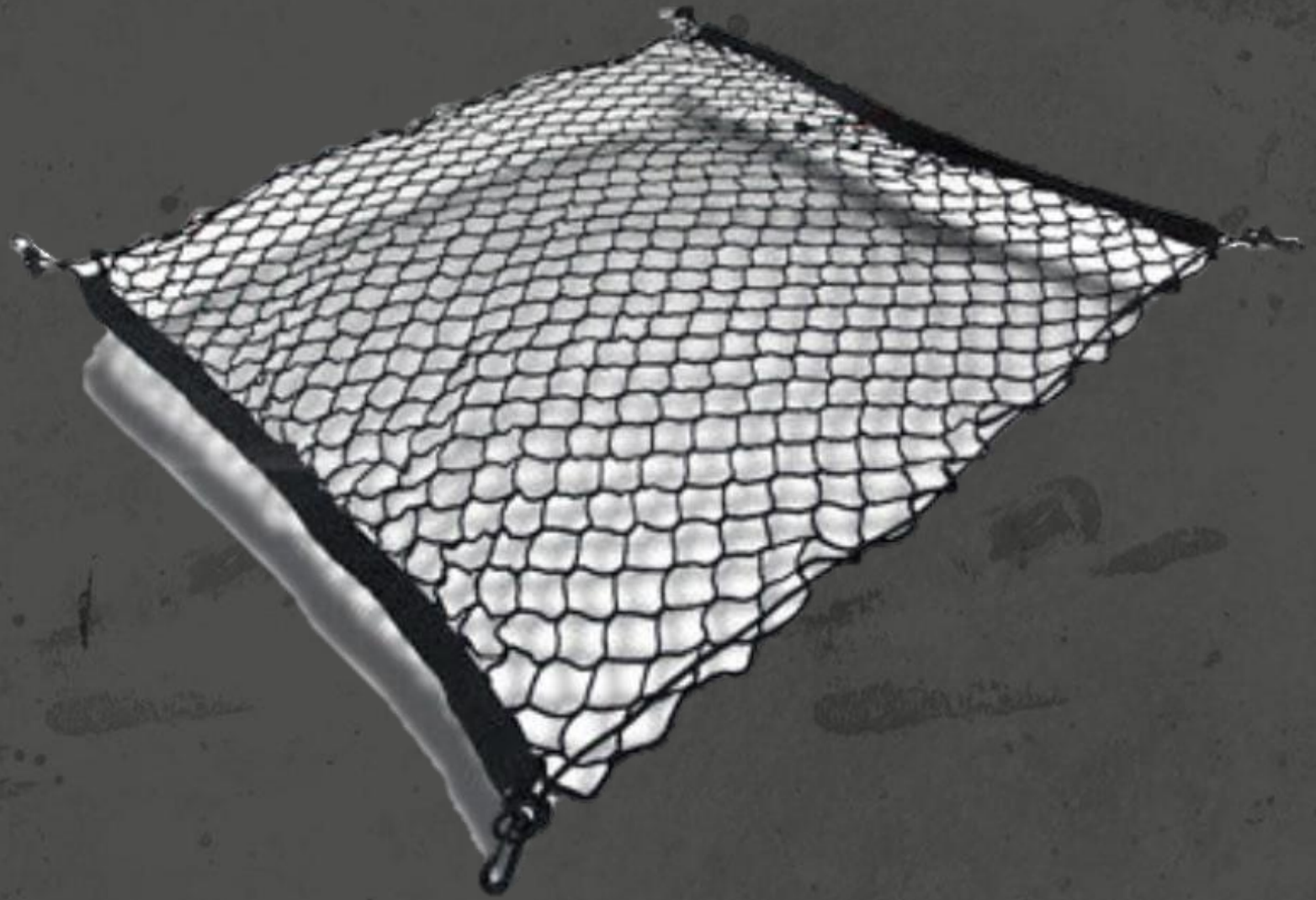

MISSION:READY // MARCH 2018

R. FEHAN March 18,2018

ROXOR Key Upcoming Accessories

ROXOR Rear Box Cargo Net Q3 2018

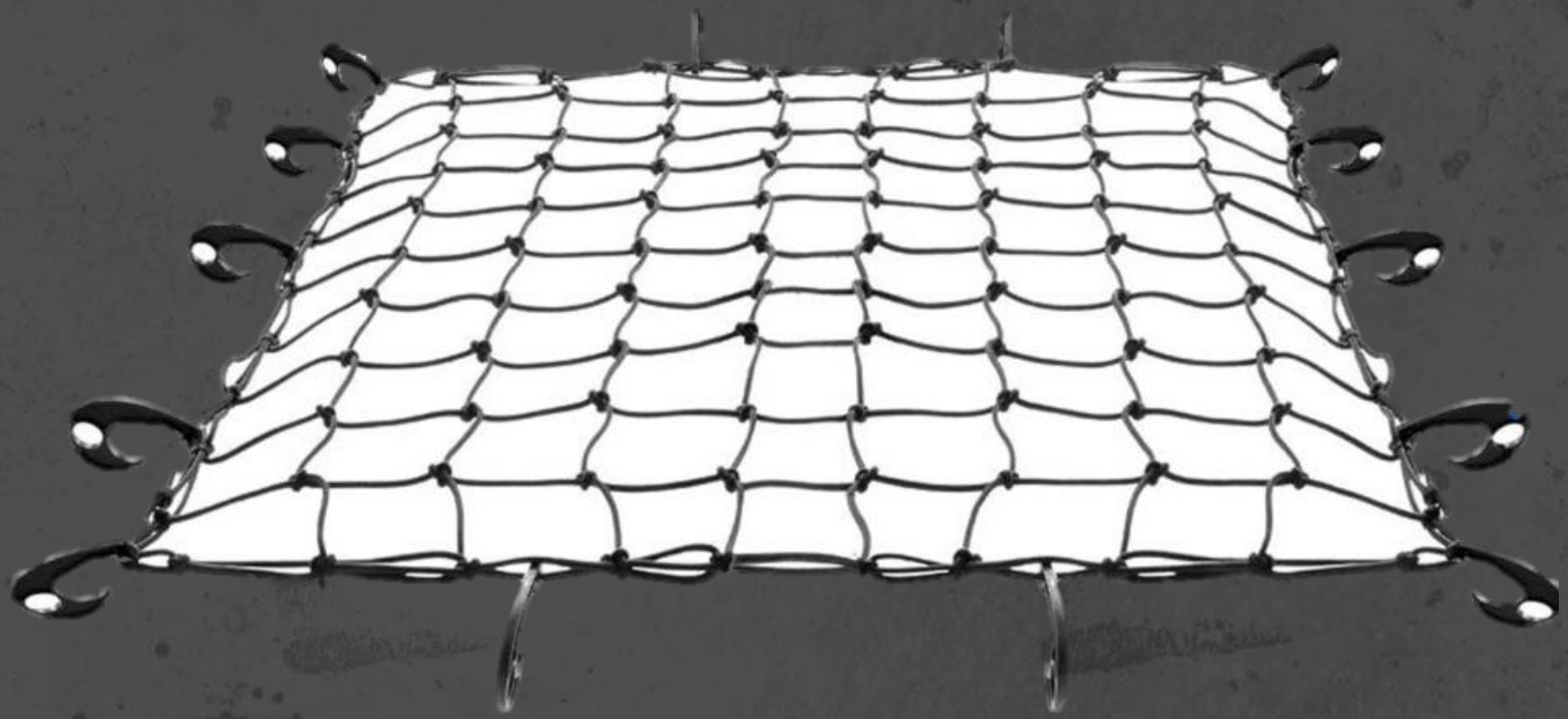

MISSION:READY // MARCH 2018

R. FEHAN March 18,2018

ROXOR Key Upcoming Accessories

ROXOR Armor, Body Side Steps **Q3 2018**

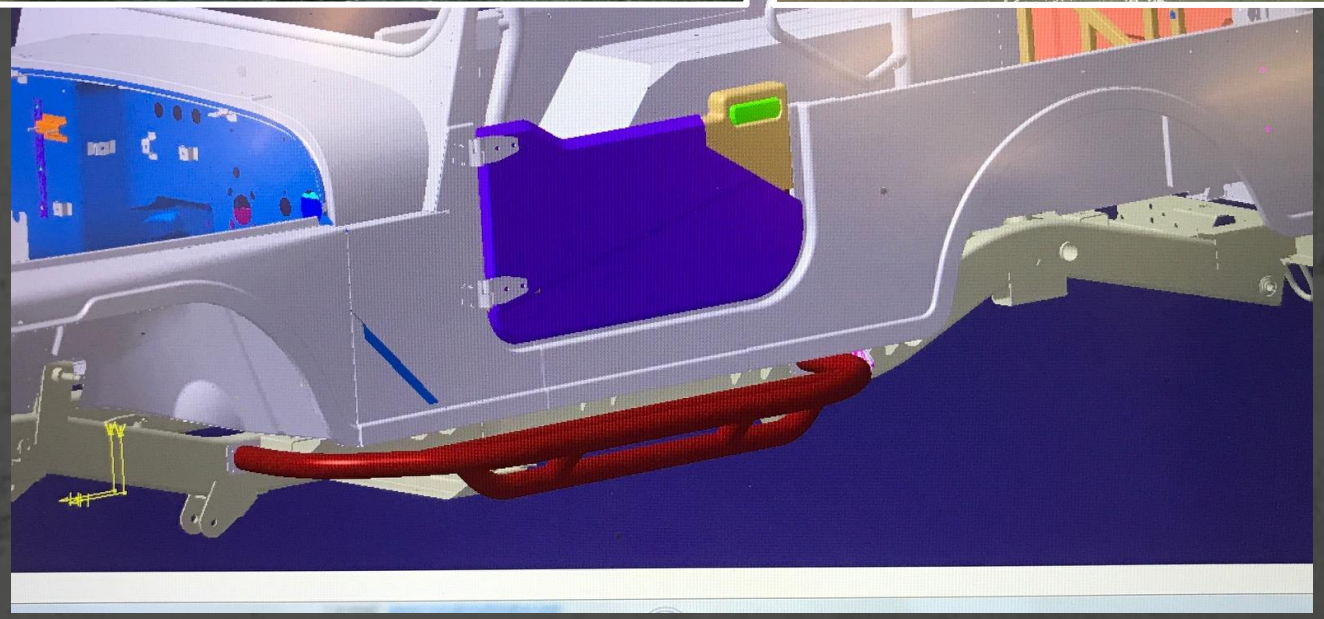

MISSION:READY // MARCH 2018

R. FEHAN March 18,2018

ROXOR Key Upcoming Accessories

ROXOR Armor Side Steps Q3 2018

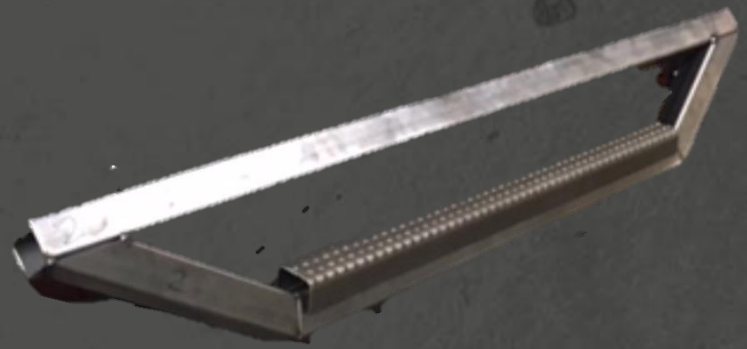

MISSION:READY // MARCH 2018

R. FEHAN March 18,2018

ROXOR Key Upcoming Accessories

ROXOR Armor Rear Bumper with Tow Hooks Q3 2018

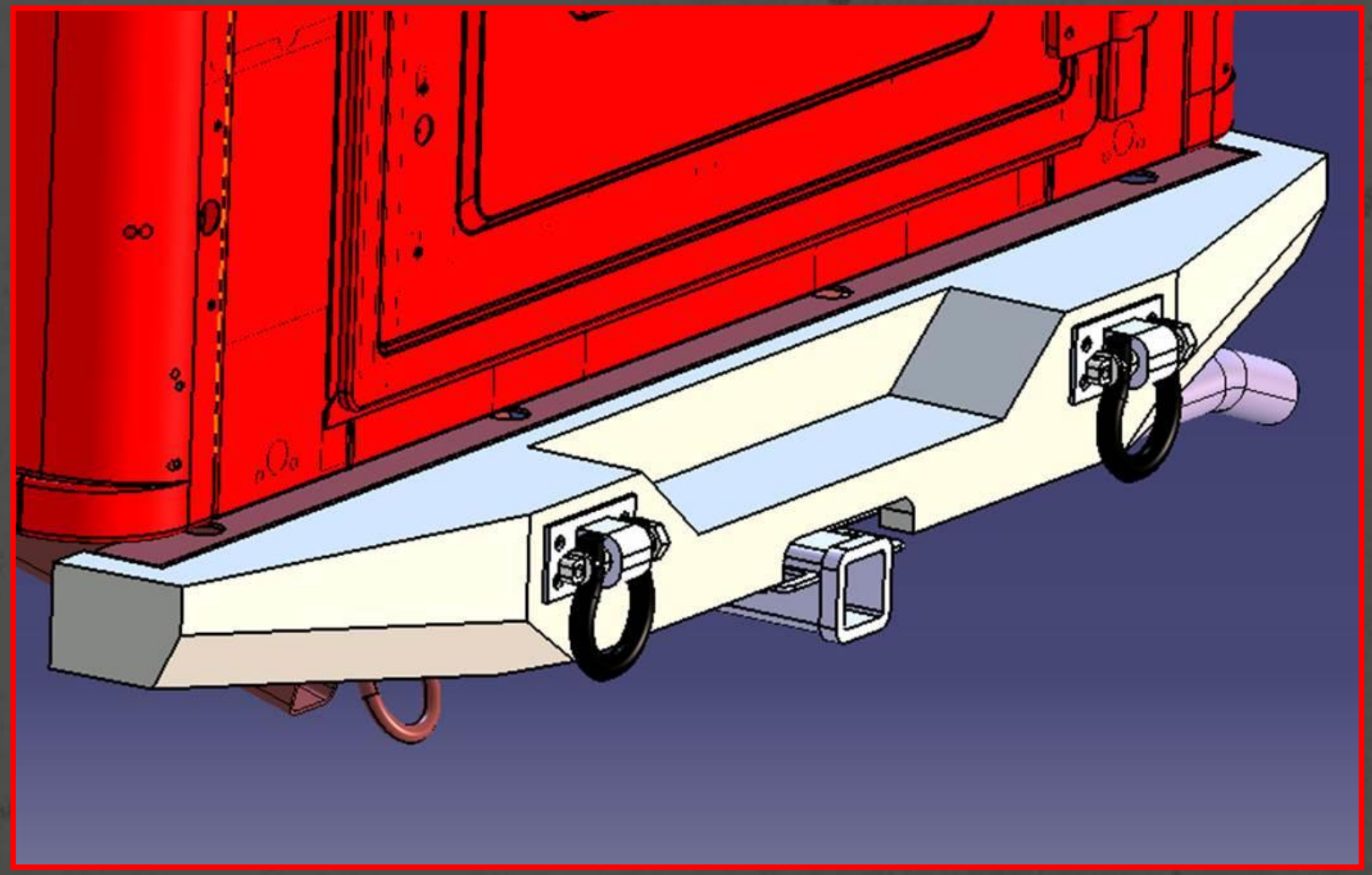

MISSION:READY // MARCH 2018

R. FEHAN March 18,2018

ROXOR Key Upcoming Accessories

ROXOR Armor Rear Bumper with Tow Hooks and Receiver Q3 2018

MISSION:READY // MARCH 2018

R. FEHAN March 18,2018

ROXOR Key Upcoming Accessories

ROXOR ARMOR Pintle and Ball Hitch Q2 2018

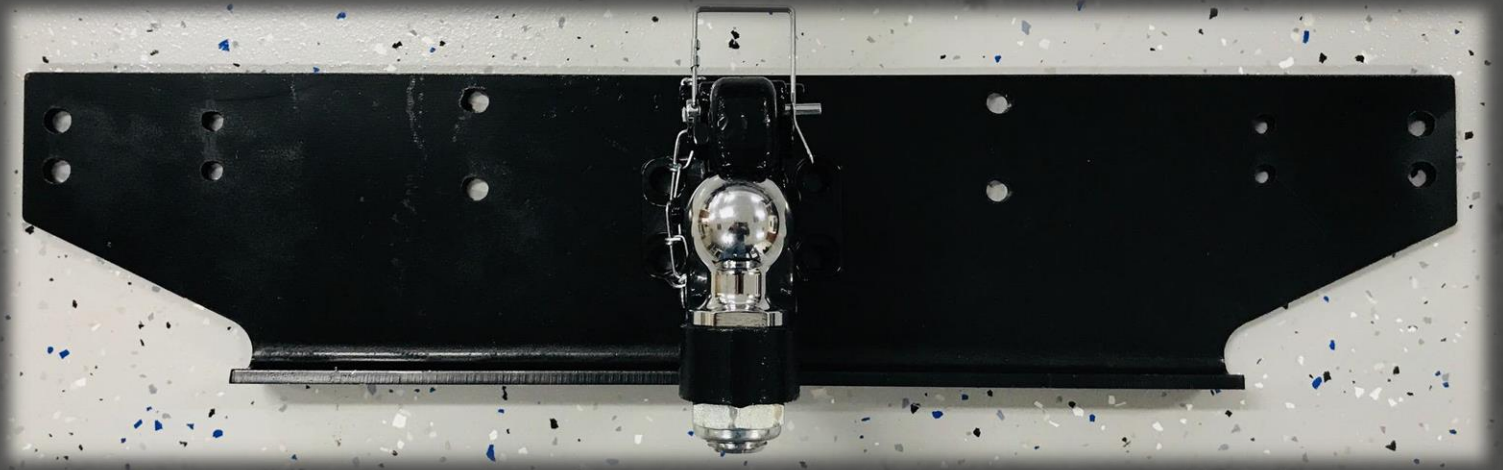

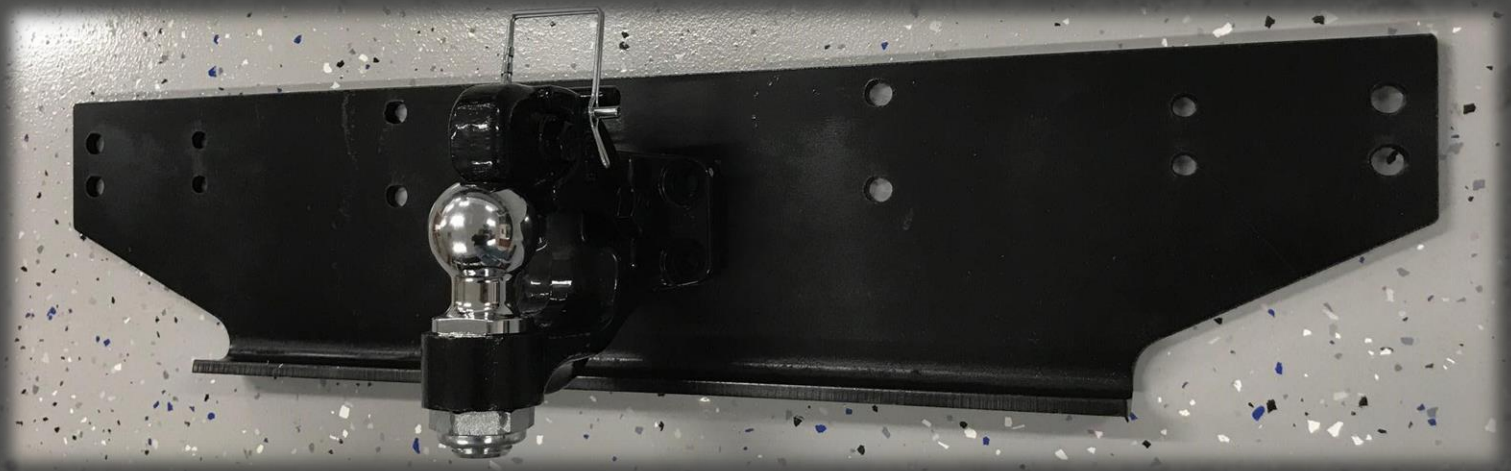

MISSION:READY // MARCH 2018

R. FEHAN March 18,2018

ROXOR Key Upcoming Accessories

ROXOR Hard Top Option Q1 2018

MISSION:READY // MARCH 2018

R. FEHAN March 18,2018

ROXOR Key Upcoming Accessories

ROXOR Armor Front Bumper with Toe Hooks, Brush Guard with Integrated WARN Winch Q3 2018

MISSION:READY // MARCH 2018

R. FEHAN March 18,2018

ROXOR Key Upcoming Accessories

ROXOR Armor Skid Plates for Oil Pan and Transition Q3 2018

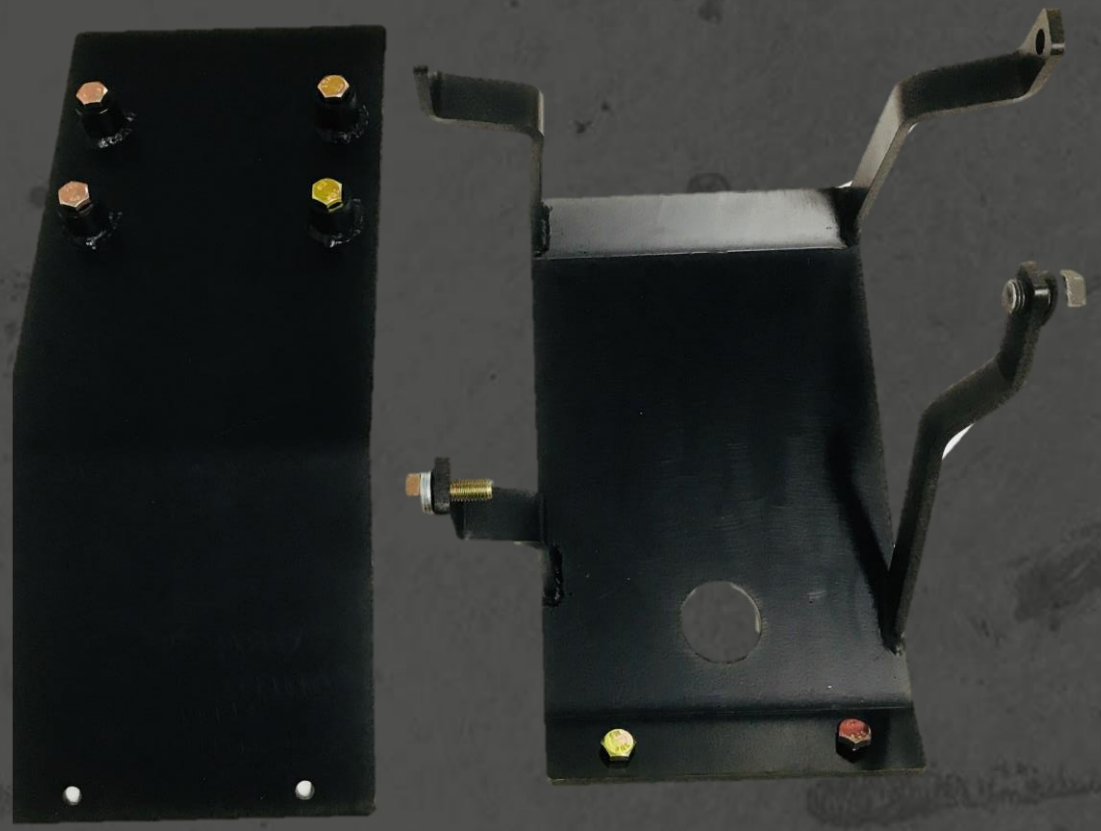

MISSION:READY // MARCH 2018

R. FEHAN March 18,2018

ROXOR Key Upcoming Accessories

ROXOR ARMOR Locking Tube Doors **Q3 2018**

MISSION:READY // MARCH 2018

R. FEHAN March 18,2018

ROXOR Key Upcoming Accessories

ROXOR Offroad Shock Options Q4 2018

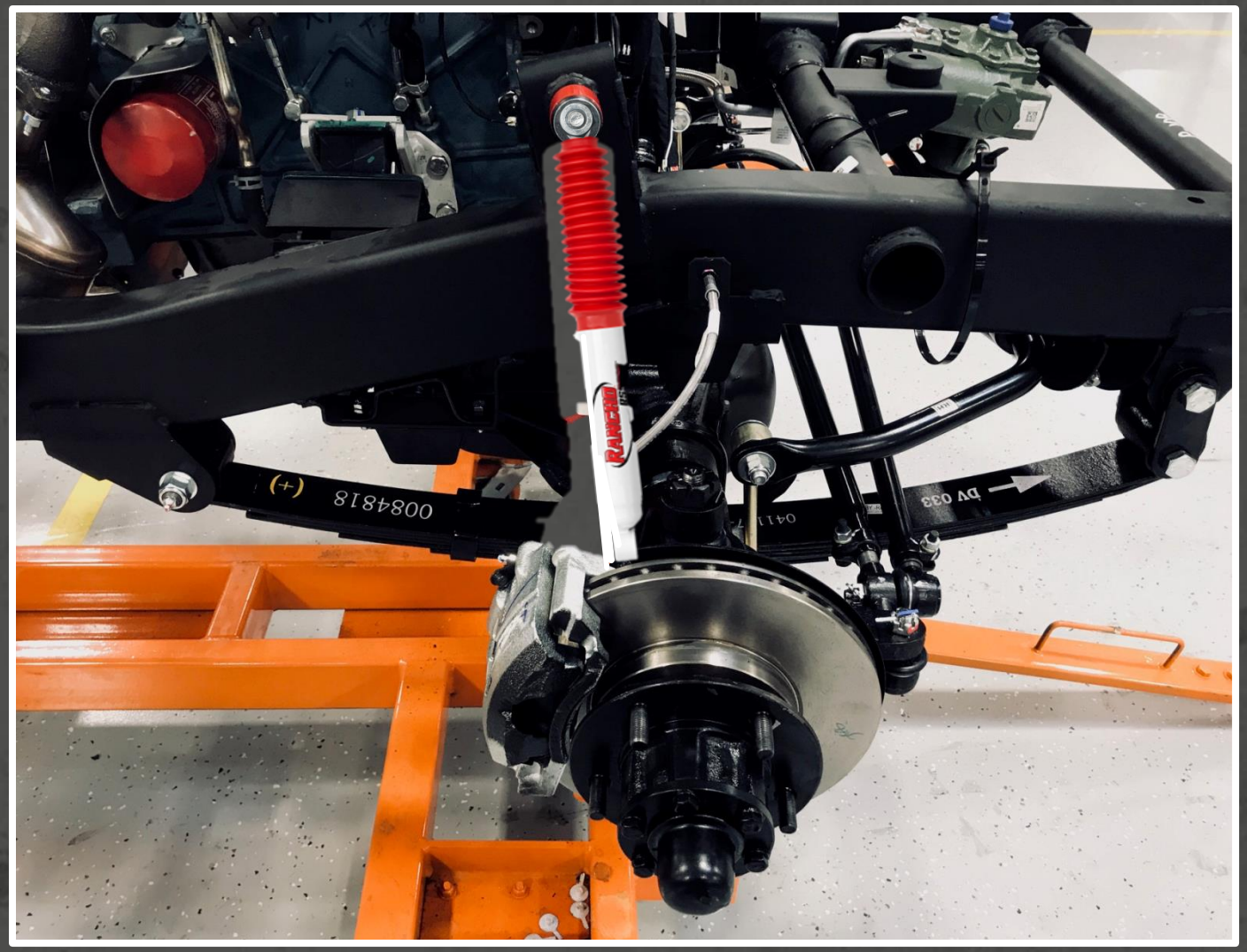

MISSION:READY // MARCH 2018

R. FEHAN March 18,2018

ROXOR Key Upcoming Accessories

ROXOR Offroad Shock Options Q4 2018

MISSION:READY // MARCH 2018

R. FEHAN March 18,2018

ROXOR Key Upcoming Accessories

ROXOR Winter Plow Package Q4 2018

MISSION:READY // MARCH 2018

Mahindra

R. FEHAN March 18,2018

ROXOR Key Upcoming Accessories

ROXOR Winter Plow Package Q4 2018

MISSION:READY // MARCH 2018

R. FEHAN March 18,2018

ROXOR Key Upcoming Accessories

ROXOR Armor Tow Bar that Easily Connects To Your Tow Hooks 3Q 2018

MISSION:READY // MARCH 2018

R. FEHAN March 18,2018

ROXOR Key Upcoming Accessories

ROXOR Mean Grill Options with Projector Lights

MISSION:READY // MARCH 2018

R. FEHAN March 18,2018

ROXOR Key Upcoming Accessories

ROXOR Hardtop and Cabin Enclosure

ROXOR Modular Construction for easy clap on assembly

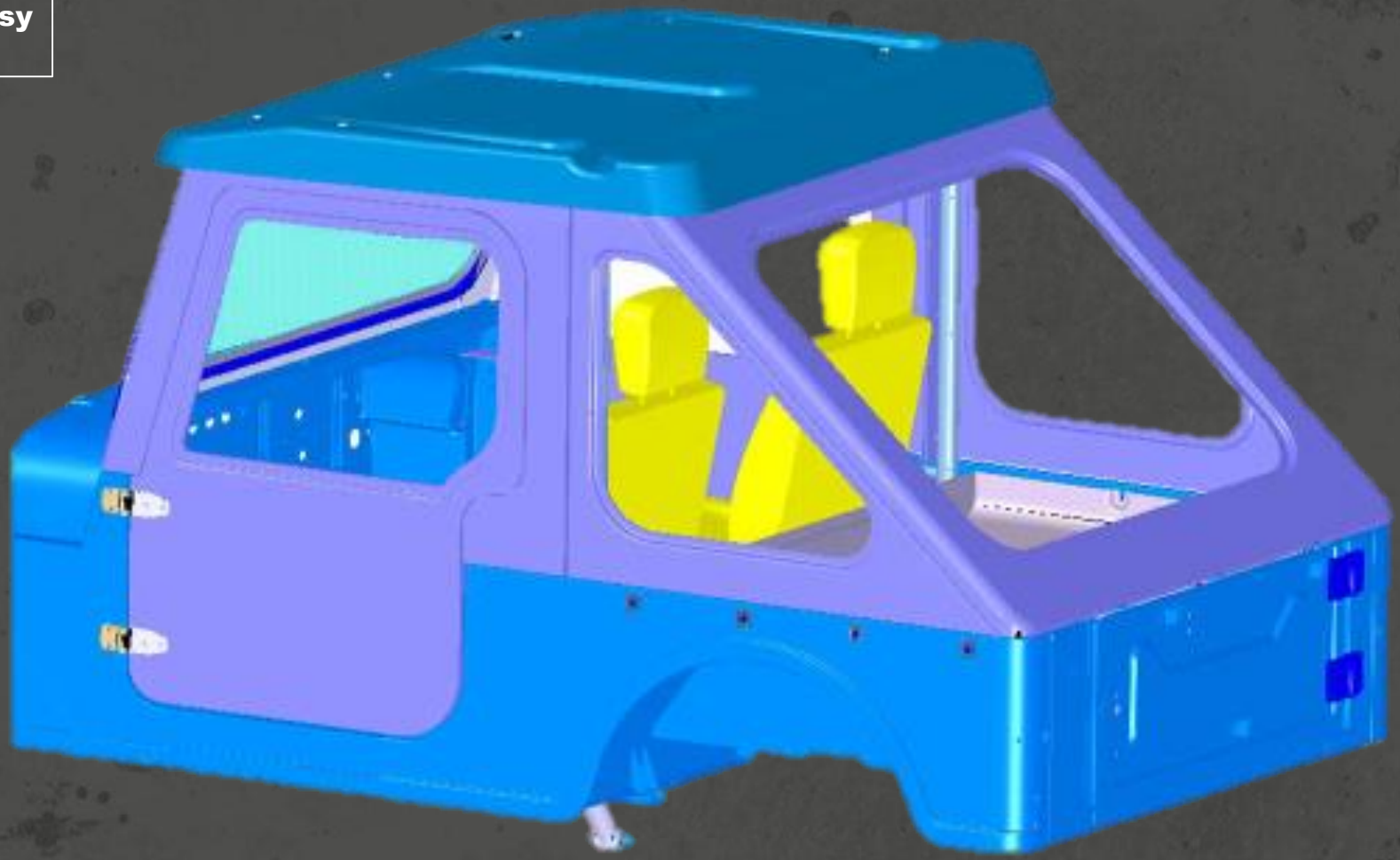

MISSION:READY // MARCH 2018

R. FEHAN March 18,2018

ROXOR Key Upcoming Accessories

ROXOR Modular Construction for easy clap on assembly

ROXOR Hardtop and Cabin Enclosure

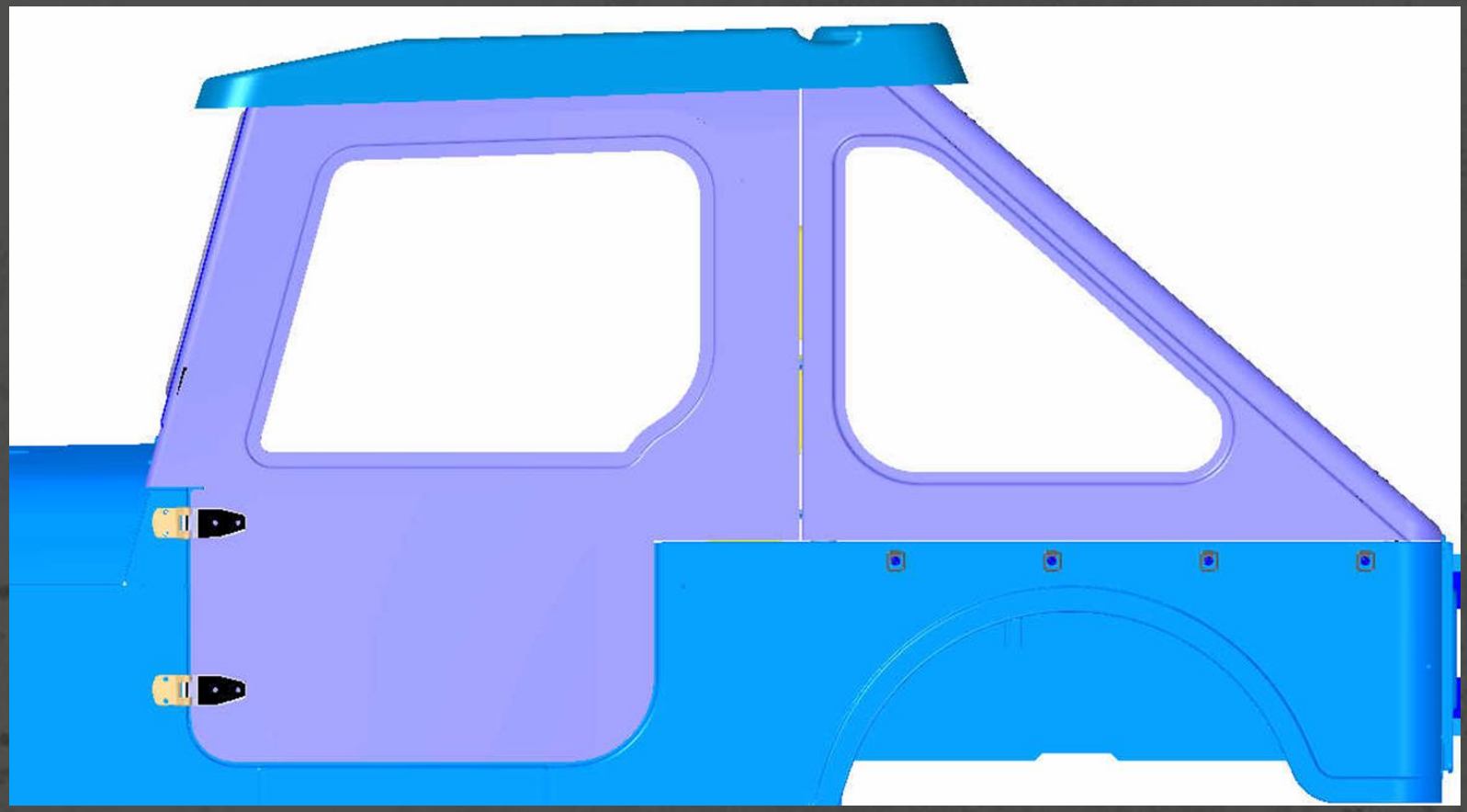

MISSION:READY // MARCH 2018

R. FEHAN March 18,2018

ROXOR Key Upcoming Accessories

ROXOR Hardtop and Cabin Enclosure

ROXOR Modular Construction for easy clap on assembly

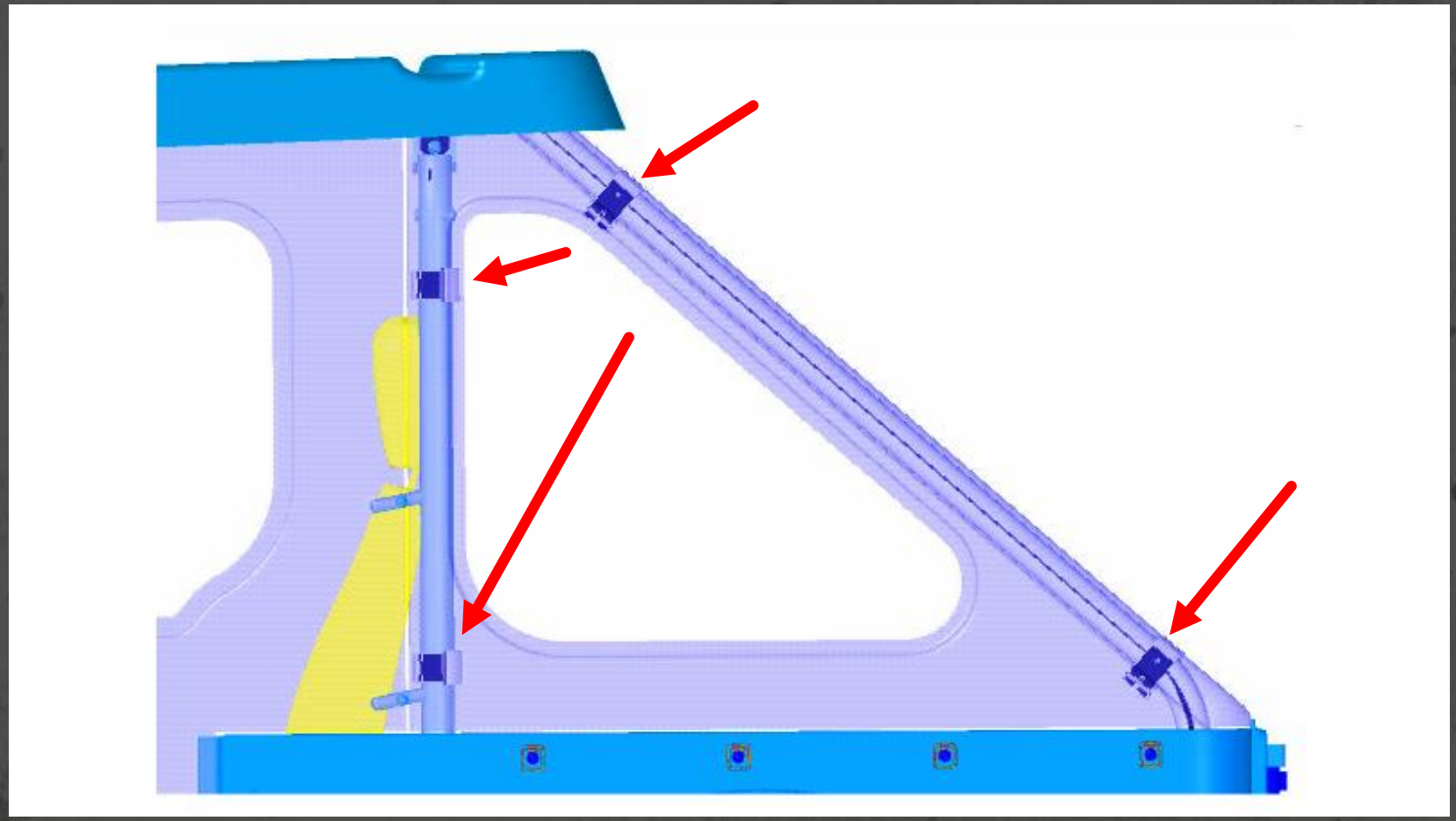

MISSION:READY // MARCH 2018

R. FEHAN March 18,2018

ROXOR Key Upcoming Accessories

ROXOR Accessory, Half Hard Door Kit 4Q 2018

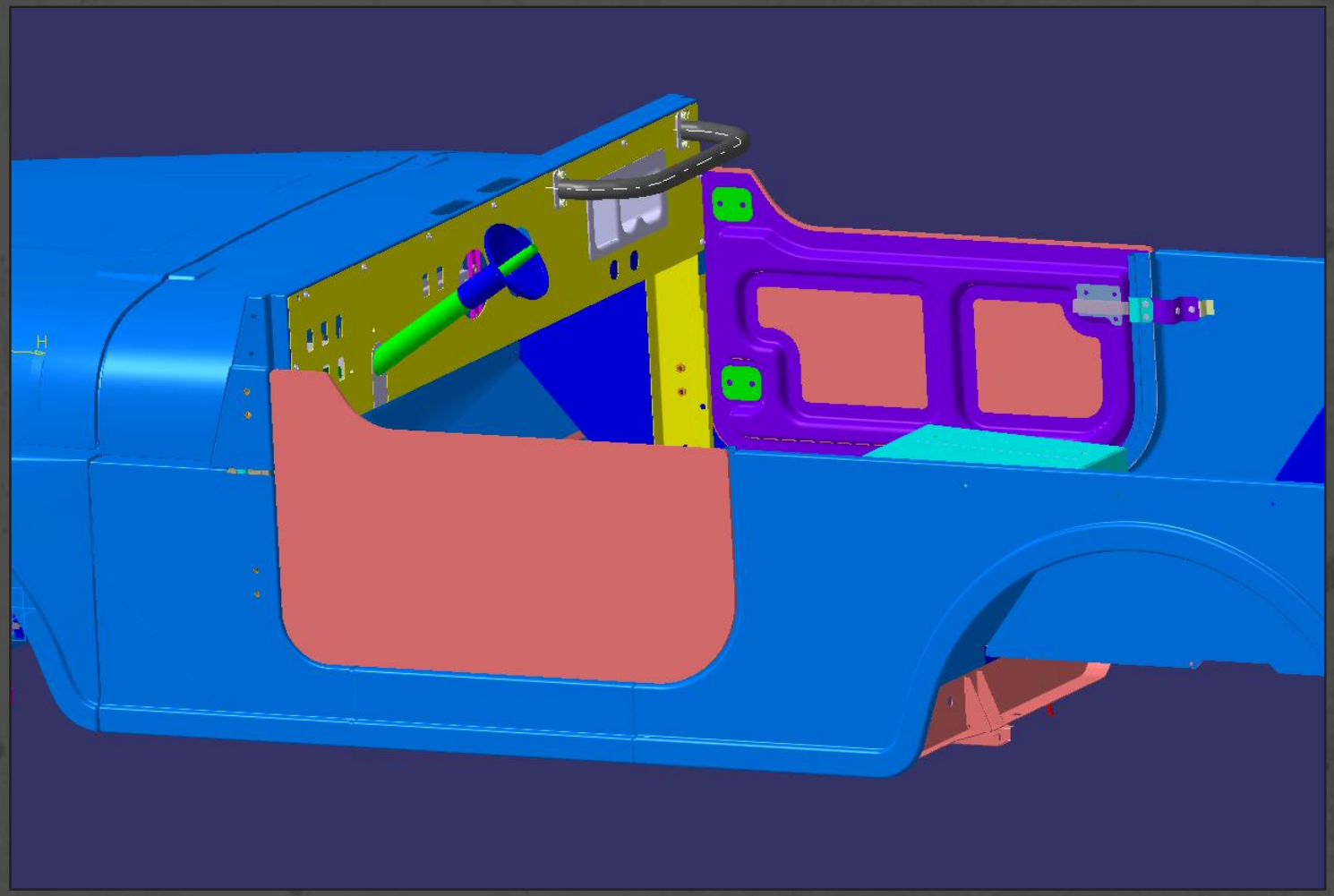

MISSION:READY // MARCH 2018

R. FEHAN March 18,2018

ROXOR Key Upcoming Accessories

ROXOR Wheel Flare Kit 4Q 2018

MISSION:READY // MARCH 2018

R. FEHAN March 18,2018

ROXOR Key Upcoming Accessories

ROXOR LED Headlights

MISSION:READY // MARCH 2018

R. FEHAN March 18,2018

ROXOR Key Upcoming Accessories

ROXOR Projector Headlights and Tough Bumper

MISSION:READY // MARCH 2018

R. FEHAN March 18,2018

ROXOR *G.I.JOE* Concept Edition

MISSION:READY // MARCH 2018

MISSION:READY

R. FEHAN March 18,2018

ROXOR *CommandoR* *Mattrax*

MISSION:READY // MARCH 2018

R. FEHAN March 18,2018

ROXOR 5 YEAR PLAN

ROXOR Rock Crawler Concept Edition

MISSION:READY // MARCH 2018

R. FEHAN March 18,2018

ROXOR 5 YEAR PLAN

ROXOR Four Door *OFFROADER* Concept Vehicle

MISSION:READY // MARCH 2018

R. FEHAN March 18,2018

ROXOR 5 YEAR PLAN

ROXOR 4 Plus 4 Door Pickup Offroad Concept Vehicle

MISSION:READY // MARCH 2018

R. FEHAN March 18,2018

ROXOR 5 YEAR PLAN

ROXOR EXT, Extended Box Concept Vehicle

MISSION:READY // MARCH 2018

R. FEHAN March 18,2018

ROXOR 5 YEAR PLAN

ROXOR 4 Place Forward Facing Rear Seat with Extended ROPs

MISSION:READY // MARCH 2018

R. FEHAN March 18,2018

ROXOR 5 YEAR PLAN

ROXOR 6 Place North South Facing Seats with Extended ROPs

MISSION:READY // MARCH 2018

R. FEHAN March 18,2018

ROXOR 5 YEAR PLAN

ROXOR Exoskeleton Concept with Fully Independent Suspension

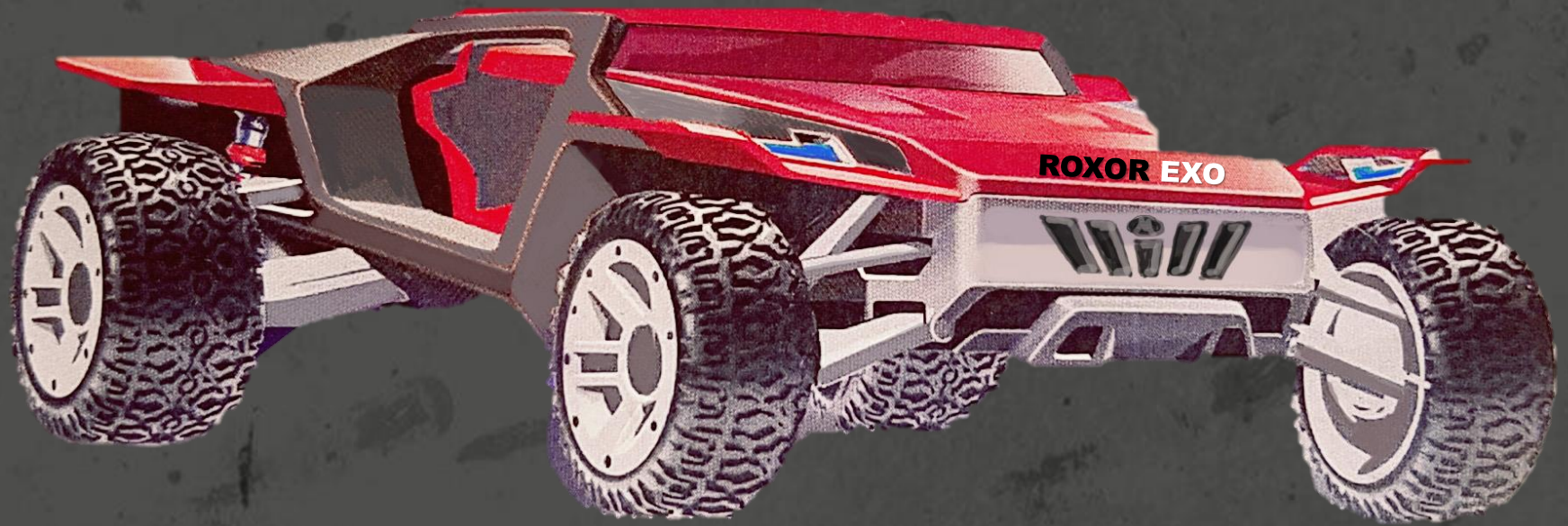

MISSION:READY // MARCH 2018

R. FEHAN March 18,2018

ROXOR Key Upcoming Accessories

ROXOR OFFROAD APPERIAL Q3 2018

MISSION:READY // MARCH 2018

R. FEHAN March 18,2018

ROXOR Key Upcoming Accessories

R. FEHAN March 18,2018

ROXOR Key Upcoming Accessories

ROXOR Tilt Dump Box

MISSION:READY // MARCH 2018

R. FEHAN March 18,2018

ROXOR Key Upcoming Accessories

ROXOR TILT BOX Tier 4 Required

MISSION:READY // MARCH 2018

R. FEHAN March 18,2018